High-temp. M18 Series DC 3-Wire Sn 8mm

Inductive sensors

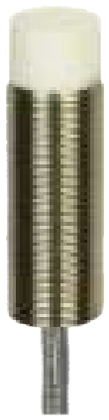

Features:

- M18*1 mm , Metal housing;
- 8mm , non-flush mountable;
- DC 3-wire , switching output;
- Withstand High-temperatures(-25...230℃);
- Cable & Connector versions

RoHS CE

Dimensioned drawing

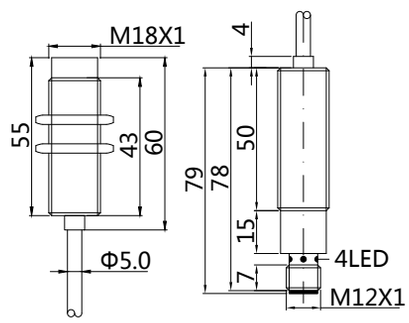

Model No.

Sensing range	Sn:8 mm
NPN	SIHN-M18-08P-V11-K3-3M12-230EXT
PNP	SIHN-M18-08N-V11-K3-3M12-230EXT

Mounting

(non-flush mounting)

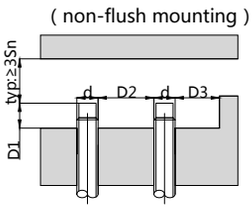

Sn	D1	D2	D3
M1808	≥16	≥36	≥18

⚠ Tightening torque of the fastening screws: <20Nm!

Correction Factor	
Nav-ferrous metal	Factor
Fe360	1
Aluminum	0.35~0.45
Brass	0.35~0.5
Copper	0.25~0.45
Stainless steel	0.6~1.0
Cast Iron	0.93~1.05
Nickel	0.65~0.75

Technical data

Electrical data	Operating voltage	10-30V DC
	Switching frequency	500Hz/230℃
	Voltage drop	≤1.8V
	Leakge current	<0.01mA
	Amplifier	External
	Load currentr	200mA
	No load current	≤25mA
	Hysteresis	3-15%(Sr)
	Repeatability	<3.0%(Sr)
	Temperature drift	<10%(Sr)
	Short circuit protection	Yes
	Overload protection	Yes
	Polarity reversal protection	Yes
Environment	Ambient temperature	-25...230℃
	Ingress protection	IP66
Mechanical data	Housing material	Stainless steel
	Face material	PEEK
Electrical connection	Connectors	KFF46PH cable/3m ; 3*0.26mm²
		S12 connector
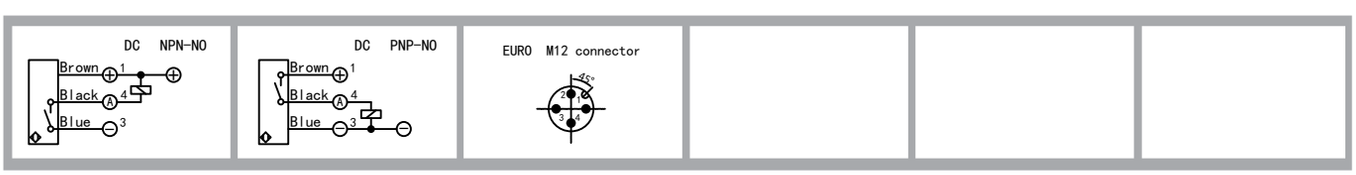
Wiring